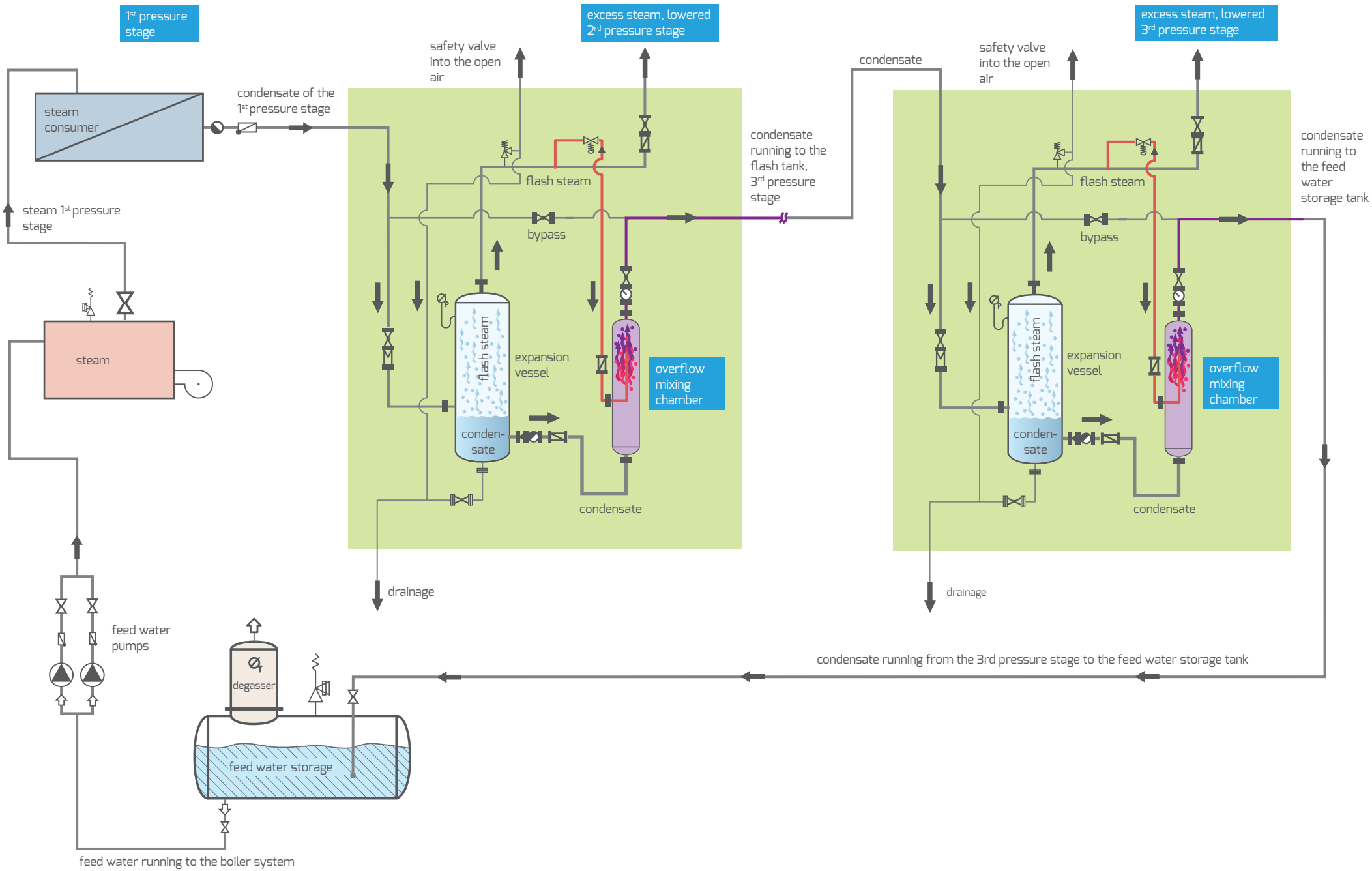
1st pressure stage
excess steam, lowered 2rd pressure stage
excess steam, lowered 3rd pressure stage
safety valve into the open air
safety valve into the open air
condensate
condensate of the 1st pressure stage
steam consumer
steam 1st pressure stage
steam
flash steam
bypass
expansion vessel
flash steam
conden-sate
overflow mixing chamber
condensate
condensate running to the flash tank, 3rd pressure stage
condensate running to the feed water storage tank
drainage
drainage
feed water pumps
degasser
feed water storage
condensate running from the 3rd pressure stage to the feed water storage tank
feed water running to the boiler system